Colour TV receiver
Televisione a colori
TESI
PC 100 - 110°

The manufacturers reserve all legal rights with regard to the ownership of this document and hereby prohibit reproduction or distribution of the same without their prior permission.
Moreover, they decline all responsibility for eventual errors, whether due to misprints or incorrect transcription, and reserve the right to make any necessary or useful changes without jeopardizing the essential characteristics.
All resistors without markings are 1/4 W - 5%. All measurements refer to ground with mains supply 220V (240V UK) correct picture and a voltmeter of 20.000 Ohm/V.

Die Herstellerfirma behält sich alle gesetzlichen Eigentumsrechte dieser Unterlage vor, der Nachdruck und die Verbreitung bedarf der ausdrücklichen Genehmigung durch dieselbe.
Ferner wird jegliche Verantwortung für eventuelle Ungenauigkeiten der vorliegenden Unterlage, durch Fehler beim Druck oder bei der Übertragung des Textes, abgelehnt. Die Herstellerfirma behält sich weiter vor, Änderungen, die als notwendig oder zweckmässig angesehen werden, vorzunehmen ohne dass dabei die wesentlichen Eigenschaften des Teiles beeinträchtigt werden.
Alle Widerstände ohne Bezeichnung sind 1/4 W - 5%. Alle Messungen beziehen sich auf Masse, mit einer Netzspannung von 220 V (240 V UK) und normalem Fernsehsignal gemessen mit einem Voltmeter von 20.000 Ohm/V.

Le constructeur se réserve aux térmes de la loi, la proprieté de le document et l'interdiction de le réimprimer ou sa divulgation sans son permi.
Decline toute responsabilitè pour d'éventuelles inexactitudes (fautes d'impression ou de transcription), contenues dans ce document. Il se réserve en outre le droit d'apporter toutes les modifications qu'il estimerait necessaires ou utiles, sans porter préjudice au caracteristiques essentielles.
Toutes les résistances sans d'indication sont de 1/4 W - 5%. Toutes les mesures sont respect a la masse, avec tension secteur 220 V (240 V UK). Image corecte et avec un voltmètre de 20.000 Ohm/V.

La casa costruttrice si riserva ai termini di legge la proprietà del presente documento con divieto di riprodurlo o divulgarlo senza sua previa autorizzazione.
Inoltre declina ogni responsabilità per le possibili inesattezze contenute nel presente documento, se dovute ad errori di stampa o trascrizione. Si riserva il diritto di apportare quelle modifiche che ritenesse necessarie o utili, senza pregiudicarne le caratteristiche essenziali.
Tutte le resistenze prive d'indicazione s'intendono da 1/4 W - 5%. Tutte le misure s'intendono rispetto a massa con alimentazione rete 220 V (240 V UK). Immagine corretta e con un voltmetro da 20.000 Ohm/V.

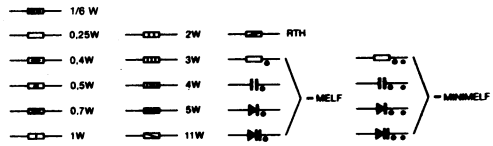

In order to ensure the maximum safety and reliability, original spare parts should always be used when replacing components.
Particular care should be taken when replacing components marked with the symbol ⚠

Zur Gewährleistung von Sicherheit und Zuverlässigkeit dürfen nur Original-Ersatzteile verwendet werden.
Besondere Sorgfalt wird bei den Teilen, die mit dem Symbol ⚠ gekennzeichnet sind, verlangt.

Pour une plus grande sécurité et fiabilité, tous les composants doivent être remplacés par des pièces originales.
Il faut prêter une attention particulière à ceux portant le symbole ⚠ .

Ai fini della sicurezza ed affidabilità tutti i componenti devono essere sostituiti con pezzi originali.
Particolare attenzione va posta a quelli contrassegnati con il simbolo ⚠ .

MEASUREMENTS PERFORMED USING COLOUR BARS WITH 100% MODULATION
MESSUNGEN SIGNALTYP 100% MODULIERTES FARBBALKEN
LES MESURES SONT EFECTUEES AVEC SIGNAL: MIRE EN COULEUR MODULEE AU 100%
RILIEVI ESEGUITI CON SEGNALE: BARRE COLORE MODULATE AL 100%

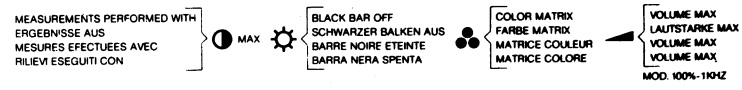

TELAIO PC100 "TESI"
OPERAZIONI DI TARATURA

Alimentazione
- Condizioni di misura: contrasto e luminosità al minimo (I beam = 0)
- Regolare P401 per 155V +- 0.5V su TP7.

Frequenza intermedia video ed audio
- Applicare su segnale a frequenza intermedia all'ingresso del SAW filter e regolare L205 per la miglior risposta Video (TP 14).
- Regolare L204 (trappola 5.5MHz) per la minor residua (TP 14).
- Regolare L200 per la minor residua video (TP8).
- Regolare L202 (5.5MHz) ed L201 (5.74MHz) per la massima uscita rispettivamente su TP4 e TP6.
- Portante pilota a 54.7KHz regolare L501 per il massimo su TP81.

AGC Top
- Sintonizzare un canale VHF 3° banda con un segnale di 1mV di ampiezza e regolare P200 per una tensione di 8.5V +- 0.2V su TP60.

Geometria (sequenza)
1.- Sintonizzare un canale (monoscopio), pre-regolare la focalizzazione generale dell'immagine e pre-tarare la G2.

Regolare: contrasto, colore e luminosità per un'immagine normale.
2.- Entrare in modo **"SERVICE"** [illegible] sullo schermo appariranno il registro da settare ed il relativo valore.
La selezione della funzione da regolare viene fatta con i tasti e la regolazione del valore con i tasti
3.- Attivare il blanking verticale (SBL) premendo il tasto
4.- Regolare la posizione verticale del blanking al centro dello schermo con VSH.
5.- Regolare il "vertical slope" (VS) finchÈ la linea centrale del cerchio È visibile per metà. Togliere il "service blanking" (SBL) premendo il tasto .
6.- Regolare l'ampiezza verticale (VA) e la linearità (SC)
7.- Regolare l'ampiezza della parabola (PW) ed il "corner correction" (CP).
8.- Regolare la posizione orizzontale (HS), l'ampiezza orizzontale (EW) e la correzione trapezio (TC).

Amplificatori video
Eseguire le seguenti tarature dopo la regolazione delle deflessioni (geometria) e preriscaldare l'apparecchio per 15 :- 20 minuti prima di procedere.
1.- Contrasto e luminosirà a metà posizione circa (o normalizzata) e sintonizzare un segnale con un'immagine nera.
2.- Regolare il pi˘ alto impulso di "cut-off" per 150V.
3.- Applicare un,segnale con un'immagine bianca e regolare luminosità e contrasto per 80 NIT.
4.- Regolare il guadagno del verde (WPG) e del bleu (WPB) fino ad ottenere il bianco desiderato. Controllare la scala dei grigi.
5.- La memorizzazione di tutti i parametri si ottiene premendo il tasto
6.- Fuoco: regolare la tensione di fuoco per la miglior focalizzazione su tutto lo schermo.

CHASSIS PC 100 "TESI"
Adjustment procedure

Power supply
- Brightness and contrast to minimum (Ibeam = 0)
- Adjust P401 to 155vV +- 0.5V on TP7

Video and audio intermediate frequency adjustment
- Intermediate frequency video and audio signal with the modulation requested by the standard.
- Connect the video signal to the SAW filter input and adjust L205 for the better video response (TP 14).
- Adjust L204 (5.5MHz trap) for the minimum on TP14.
- Adjust L200 for the minimum video output at TP8.
- Adjust the 5.5MHz and 5.74MHz demodulators for the maximum output on TP4 and TP5.

AGC top
- Apply an antenna signal of 1mV and adjust P200 for a voltage of 8.5V +-0.2V on TP60.

Adjustment of geometry control parameters
- All the geometry settings are done via the service menu. Before entering the **SERVICE MODE**, apply a picture with a test circle (ex Philips pattern) to the receiver. Adjust the brightness, contrast, screen grid and focus for a normal picture.
- Enter the **"SERVICE MODE"** [illegible]
The display will show the register to be set and the relevant value.
The registers are selected by pushing buttons and the value adjusted by pushing buttons.

1.- Enter the service blanking by setting the SBL bit HIGH by pushing the button.
2.- With the vertical shift control VSH, the last line of the visible picture is positioned exactly in the middle of the screen.
After this adjustment the vertical shift should not be changed.
Set the bit SBL LOW by pushing button and the whole picture will be displayed.
3.- Adjust the top of picture with VA and the bottom is set by adjustment of the vertical slope VS.
4. Horizontal picture aligment:
- horizontal shift (HS)
- horizontal amplitude EW
. EW parabola/width PW
- EW corner/parabola CP
- EW trapezium correction TC.
5. Video amplifiers adjustment

Apply a signal with a black picture with normalized contrast and brightness.
- Adjust the highest spot cut off for 145V.
- Apply a signal with a white picture and adjust the brightness for 80 NIT.
- Check the red gain WPR and set it to 40.
- Adjust the green gain (WPG) and blue gain (WPB) for the correct white. Check for a correct tracking with a gray scale picture.
6.- By pushing the button all the registers value are memorized and by pushing the TV push button you leave the **"SERVICE MODE"**.
7.- Focus adjustment

Adjust the focus voltage with the potenziometer at the EHT transformer for a sharp picture on the screen, with high beam current.

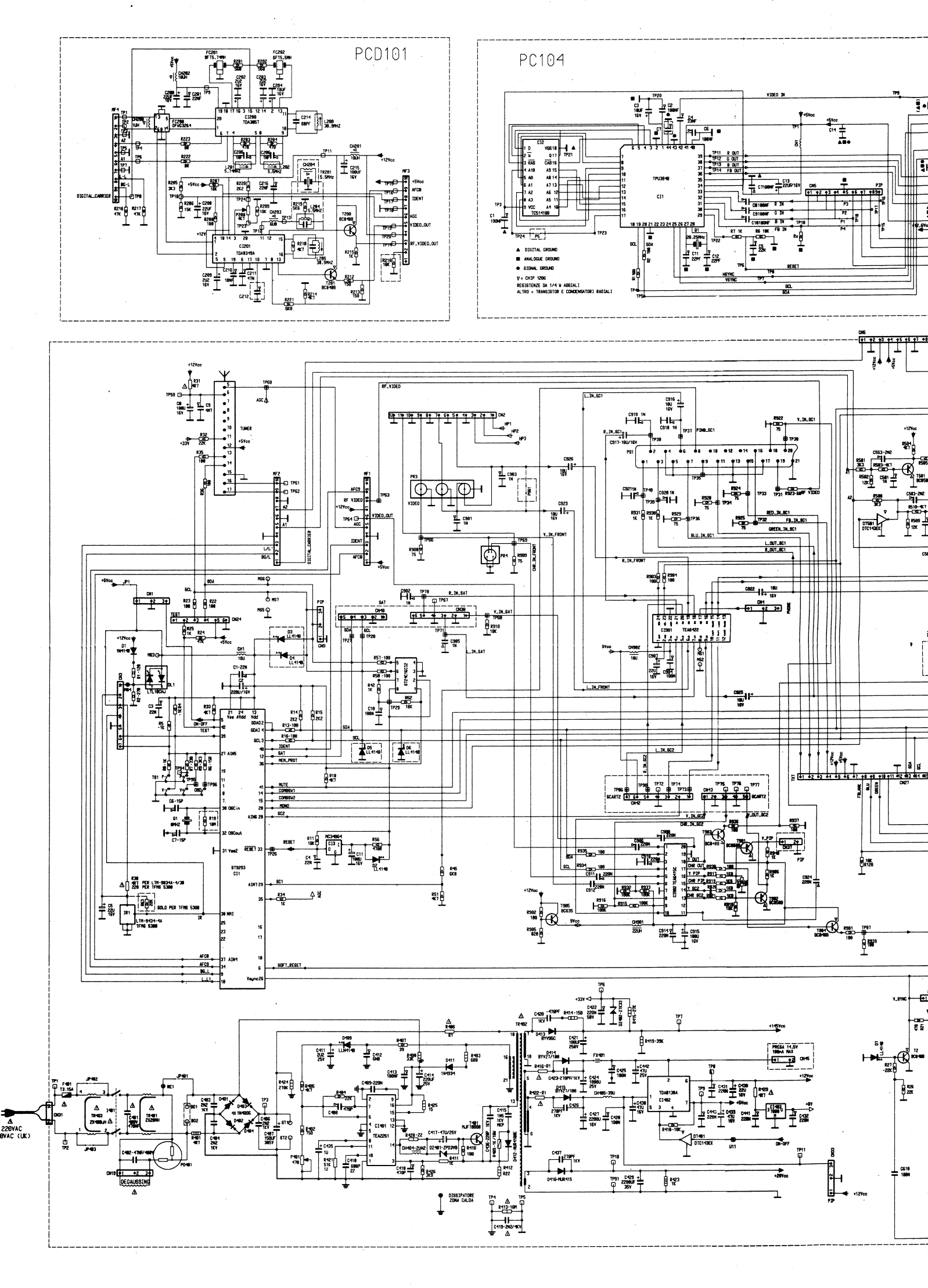
PCD101
PC104
DIGITAL GROUND
ANALOGUE GROUND
SIGNAL GROUND
RESISTENZE DA 1/4 W ASSIALI
ALTRO = TRANSISTOR E CONDENSATORI RADIALI
220VAC
0VAC (UK)
DEGAUSSING
DISSIPATORE
ZONA CALDA

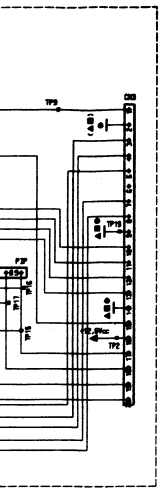

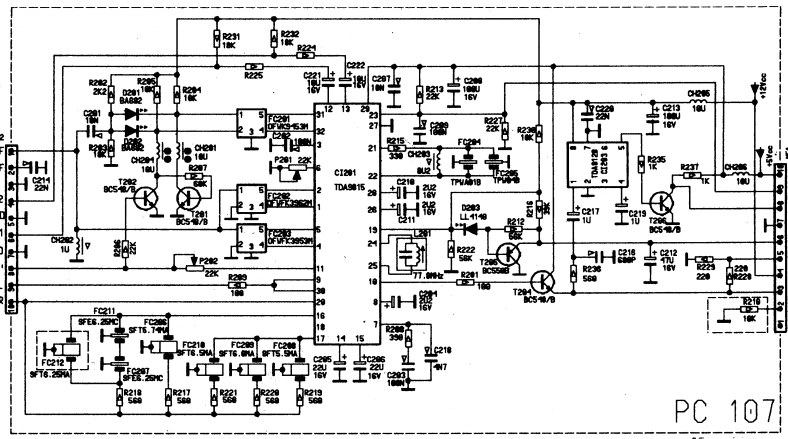
DIGITAL CARRIER
+5V
AFC OUT & VIDEO IDENT
GND
AGC
VIDEO OUT
+12V
RF VIDEO OUT
PC 107

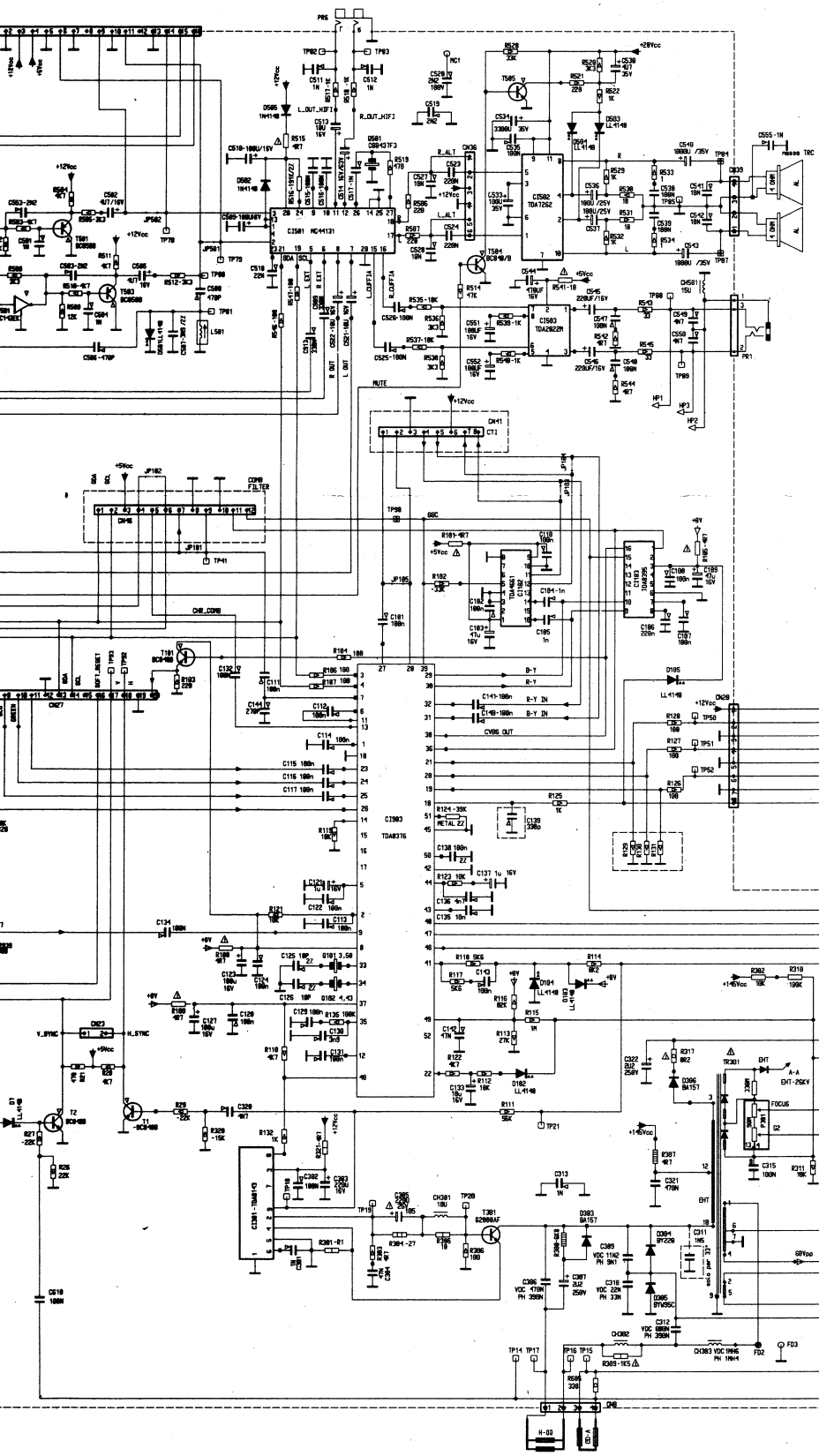

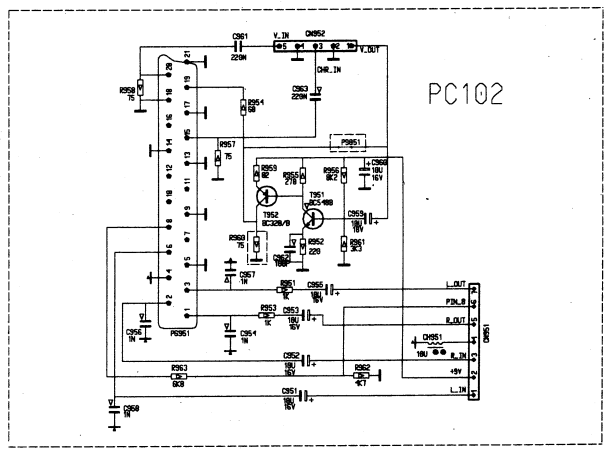
PC102

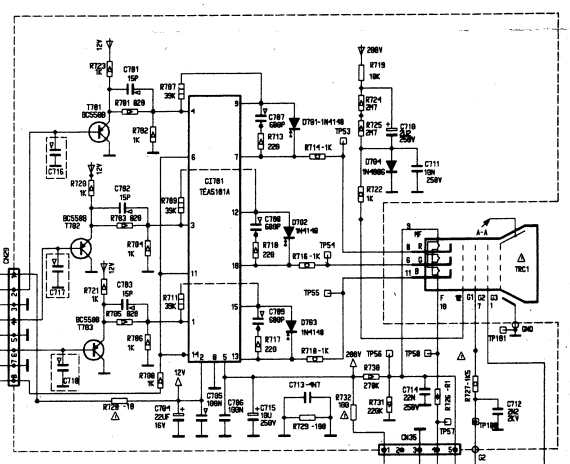

TESI

PC100

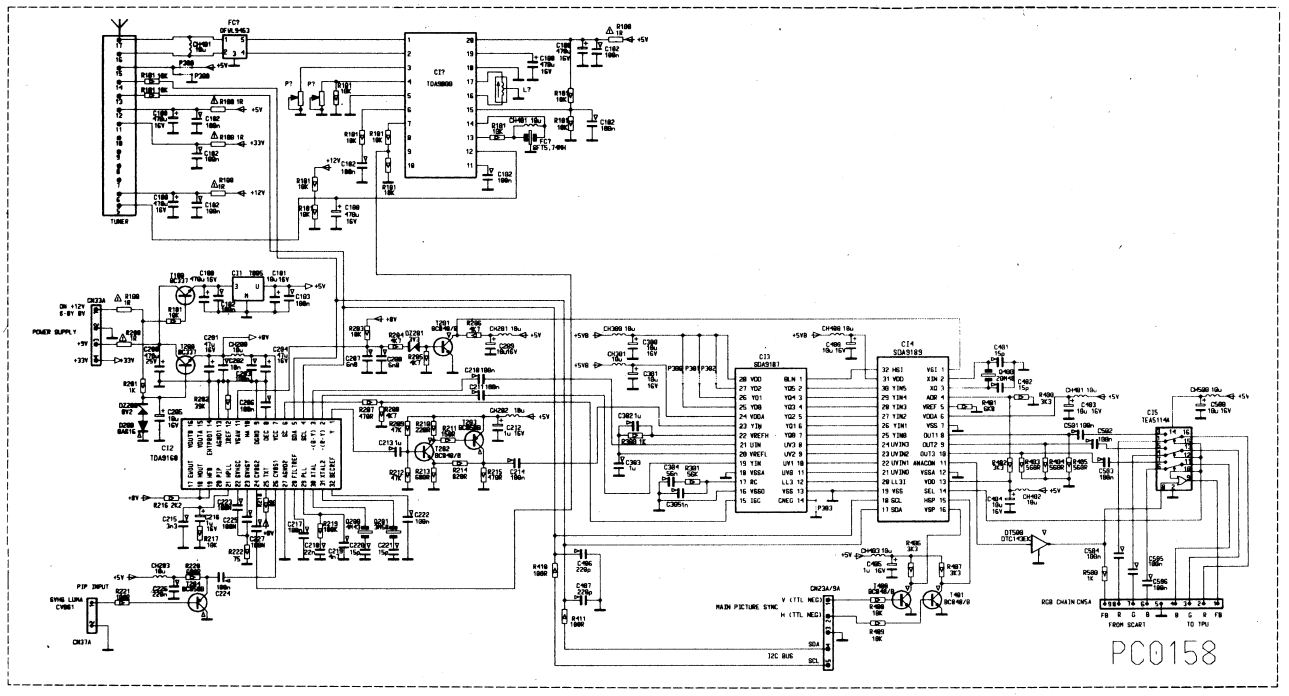

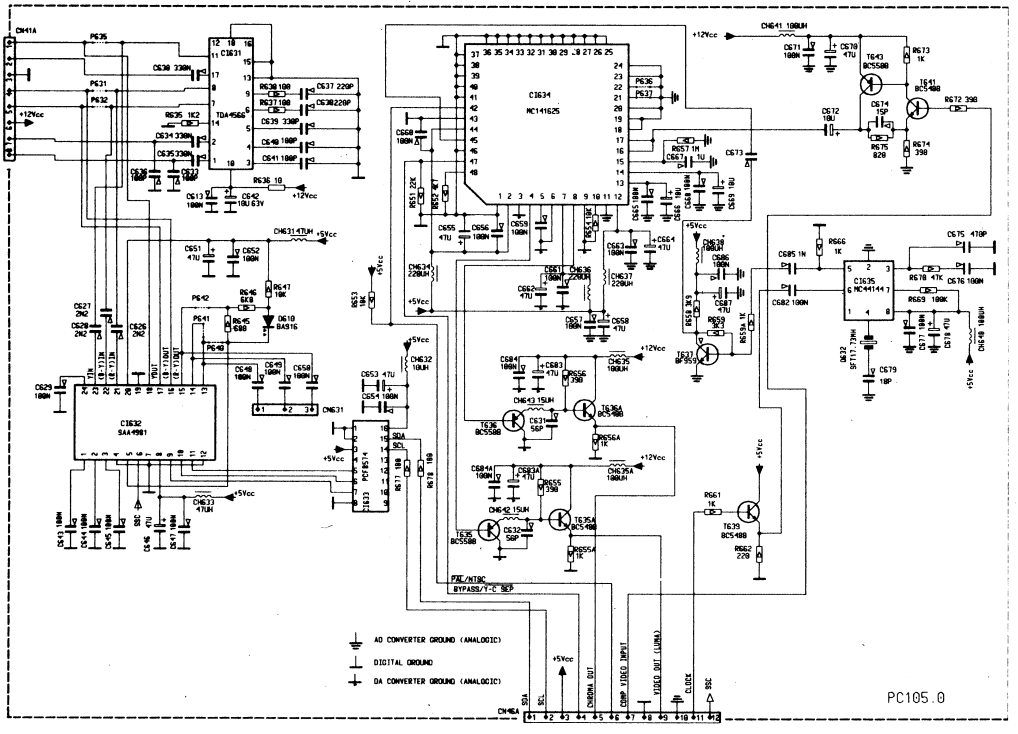

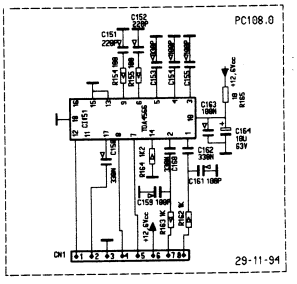

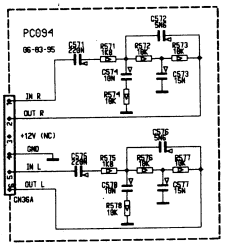

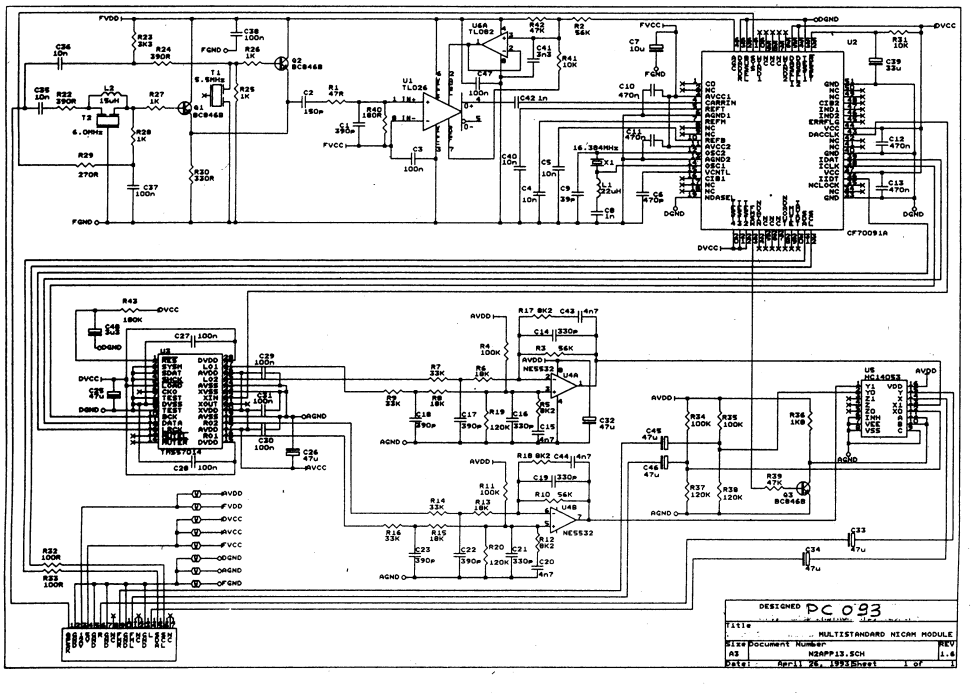

46.9047.000
SAVIOPRINT SPA - PN
3456789101112/96

Instruction manual

eneral features.

he TV set must be placed in a manner so as to allow an adequate air circulation inside it. dequate ventilation is essential to guarantee a trouble-free functioning and long life to your TV et. To reach this end, avoid exposing the TV set near heat sources, or enclosing it within a piece f furniture, etc.

he TV set is equipped with a circuit of voltage stabilization and for protecting against short circuit nd overvoltage. In case of accidental overload, not due to a fault, the TV set will automatically witch off as a self-protecting device. To operate the set again, first switch it off completely by sing the general switch, then switch it on again as usual.

he TV set is equipped with the "Automatic Switch-Off" function, which allows the set to be utomatically switched off after a preset time span. Moreover, the "Child Protection" function, hich is operative, too, prevents from watching a few programmes for a certain predetermined ngth of time.

igh voltages are present inside the TV set: neither remove the rear cover when the set is on, nor witch it on when the rear cover has been removed.

he remote control allows to operate, within a certain range, the main functions which are ecessary for the TV set to be operated. In case of emergency, the operation of controls can be arried out by using directly the buttons placed on the front panel.

Useful tips to assure the good functioning of the remote control.

Avoid light sources to be directed at the infra-red sensor placed on the front panel.

- During operation, point the remote control directly towards the sensor and avoid leaving objects in front of the sensor.
- Running down of batteries in the remote control may cause errors in the desired function, in which case the **"BATTERIES"** warning will light up on the screen.
- When replacing batteries, take care of not inverting their polarity: this mistake could seriously damage the remote control transmitter.
- Do not dispose of used batteries in your environment, but instead throw them away in the special containers for their collection.

The cabinet and picture tube must be wiped with a soft cloth, by using adequate detergent in commerce and following the instructions given by the manufacturer.
Do not use detergents containing abrasive substances, solvents or methylated spirits.
Clean the TV set while being off, and avoid the infiltration of liquids through the ventilation inlets.

Installation and tuning

1. Connect the Tv set with the electric power source and the aerial.
Press the main switch on the front panel. The switches indicated herebelow are placed on the remote control.

2. Press button (1).
Wait for the screen to light up.

. Select the desired language
ress (▼) and (▲) buttons to select the desired language. Press (● ● ●) button to confirm election.

. Select the "automatic channel tuning" mode
lo selection is necessary if the aerial or cable system is a traditional one. Press (● ● ●) button to onfirm selection.
the TV set is connected with a cable system which does not transmit programmes on the hannels normally used for broadcasting, press (▼) and (▲) button to select **"CABLE OFFSET"** nd press (● ● ●) button to confirm.

. Wait for the automatic tuning of all transmissions
he "Wait..." indicator makes it necessary to wait for all transmissions to have been tuned. Once uning has been completed, the list of all channels received is thus viewed.

. New selection of pretuned programme positions
he programmes have been tuned in a particular sequence. It is possible to swap two positions at ill.
or example, it is possible to invert the position regarding "Channel A" station of programme 01 ith that of "Network 1" station of programme 03:"Network 1" station is thus selected on rogramme 01, and "Channel A" station on programme 03.
ress (▼) and (▲) buttons to select a programme (01, for example) which will be shown off in ellow.
ress (● ● ●) buttons to confirm selection.
ress (▼) and (▲) buttons to select a second programme (03, for example). Press (● ● ●) button o confirm exchanging the former programme with the latter one.

omplete installation
he installation thus completed, has been made in full.
n request, it is possible to repeat it partially or completely by following the instructions here elow:

Language selection
Press (TV) button possibly to eliminate menus from the screen.
Press (▼) and (▲) buttons to select **"INSTALLATION"**, then press (● ● ●) to confirm.
Press (▼) and (▲) buttons to select **"LANGUAGE"**, then press (● ● ●) to confirm.
Press (▼) and (▲) buttons to choose the desired language, then press (● ● ●) to confirm.

Automatic tuning of programmes
Press (TV) button possibly to eliminate menus from the screen.
Press (● ● ●) button to recall the **MAIN SETTINGS**.
Press (▼) and (▲) buttons to select **"INSTALLATION"** then press (● ● ●) to confirm.
Press (▼) and (▲) buttons to select **"AUTOMATIC TUNING"**.
Follow the instructions of the "Programme selection" paragraph starting from point 4 "Select the "automatic channel tuning" mode".

Manual tuning of programmes
If a manual tuning of programmes is desired, the following procedure must be observed.
Press (TV) button possibly to eliminate menus from the screen.
Press (● ● ●) button to recall the **MAIN SETTINGS**
Press (▼) and (▲) buttons to select **"INSTALLATION"**, then press (● ● ●) to confirm.
No selection is necessary if the aerial or cable system is a traditional one. Press (● ● ●) button to confirm selection.

- Press (▼) and (▲) buttons to select **"CHANNEL".**
- Press (0)-(9) buttons to select double figure channel positions.
- Press (▼) and (▲) buttons to select **"PROGRAM".**
- Press (0)-(9) or (►) and (◄) buttons to select the programme position number.

Note.
Press (►) or (◄) buttons to search for the channel, if the channel number is unknown.
Press (▼) and (▲) buttons to select **"CHANNELS"** if the channel position number is indicated with "C", whereas a channel of the "S" type is required, or vice versa. Press (►) or (◄) buttons to switch from "C" channels to "S" ones and vice versa.
Press (▼) and (▲) buttons to select **"STANDARD"** if the channel desired belongs to a different standard from that indicated. Press (►) or (◄) button to select the desired standard (this function is available only in preset TV models).
Press (▼) and (▲) buttons to select **"FREQUENCY"** and press (►) and (◄) buttons to vary the frequency of channel reception slightly.

- Confirm the station on the selected programme by pressing (● ● ●) button.

ress (TV) button to conclude the manual tuning.
he manual tuning of channels can be also started by pressing (⊹) button.

the TV set is connected with a cable system which does not transmit programmes on the hannels normally used for broadcasting, press (▼) and (▲) buttons to select **"CABLE OFFSET"** nd press (● ● ●) button to confirm. .

Press (▼) and (▲) buttons to select **"CHANNEL"**.

Press (►) button to search for the broadcasting channel.

Press (▼) and (▲) buttons to select **"PROGRAM"**.

Press (0)-(9) or (►) and (◄) buttons to select the programme position number.

Confirm the station on the selecte a programme by pressing (● ● ●) button.

ssigning of a name to pretuned programmes

ome programmes are automatically tuned with their name. The other ones can be assigned a ame.
roceed as follows:

ress (TV) button possibility to eliminate menus from the screen.

ress (● ● ●) button to recall the **MAIN SETTINGS**.

ress (▼) and (▲) buttons **"INSTALLATION"**, then press (● ● ●) to confirm.

ress (▼) and (▲) buttons to select **"STATION TITLE"** then press (● ● ●) to confirm.

ress (▼) and (▲) buttons to choose a programme; it will be shown off in yellow.

ress (● ● ●) button to select a name to associate with a programme.

Press (▼) and (▲) buttons to select a name of a programme amongst those present in the list, then press (● ● ●) to confirm.
If none of the names present in the list is desired, select "....". Press (● ● ●) and then (▼) and (▲) buttons to choose the first letter of the name, or a button from (0) to (9) to choose a number.
Press (● ● ●) to move on to the second letter of the name. When four letters have been inserted, then the name is complete.
Press (▼) and (▲) buttons to select another programme or proceed as described above, to associate a new name.

TV Connections

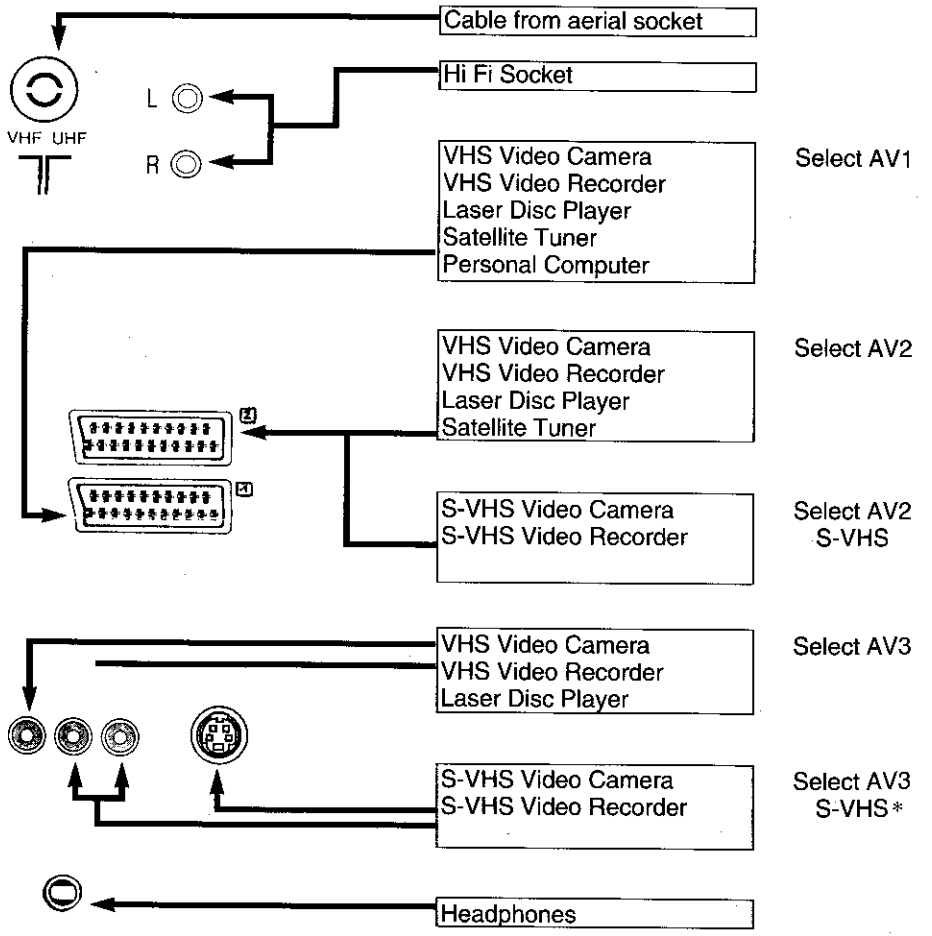

Press (0) button to select programme 0.
Press (0) button again to select inputs AV1, AV2, AV2 S-VHS, AV3, AV3 S-VHS sequentially.
* S-VHS front socket is available only on specific models.

peration and adjustment of controls

rogramme selection
ress buttons from (0) to (9) to select a single or double figure programme number.
ress (►) o (◄) button to select the previous or the following programme respectively.
he (TV) button selects the programme which has been selected previously.

olume
ress (◄) or (►) buttons to adjust the volume of the tuned programme.

nage
ress (▢) button to adjust the image of the tuned programme.
ress (▼) and (▲) buttons to select the function to be adjusted, for example **"COLOR"**, **CONTRAST"**, etc..., which is shown off. Press (◄) and (►) to change the function level.

udio
ress (◁) button to adjust the audio of the tuned programme.
ress (▼) and (▲) buttons to select the function to be adjusted, for example **"BALANCE"**, **TREBLE"**, etc..., which is shown off in yellow. Press (◄) and (►) to change the function level.

rogramme Number and Time Signal
ress (ⓘ) button to display the programme number. Press it again to eliminate display.
ress (◴) button to display the clock. Press it again to eliminate display.

Auxiliary functions
Press (TV) button possibly to eliminate menus from the screen.
Press (● ● ●) button to recall the **"MAIN SETTINGS"**.
Press (● ● ●) button to recall the menu of **"AUXILIARY FUNCTIONS"**.
Press (▼) and (▲) buttons to select:

- **"SLEEP"** to programme the TV set to be automatically switched off after a certain clapsed time Press (►) and (◄) to select the automatic off timer.
- **"AUDIO"** to give a mono output to a disturbed stereo programme, or to alternate two languages if the programme is bilingual.
- **"EXTRA WIDE"** to give the TV audio a wider diffusion range.
- **"IMAGE"** to switch from a standard image with 4:3 format, to a 16:9 format.

Programme lock
This control allows to stop the reception of all, or some, tuned programmes for a certain preset time.
Press (TV) button possibly to eliminate menus from the screen.
Press (● ● ●) button to recall the **"MAIN SETTINGS"**.
Press (▼) and (▲) buttons to select **"STATION LOCKING"**, press (● ● ●) to confirm.
Press (▼) and (▲) buttons to select **"ALL"** if a cut out of all programmes for the whole day is desired.
Press (▼) and (▲) buttons to select a different line.
Press buttons from (0) to (9) to store a single or double figure programme number; press (● ● ●) to confirm.
Press (►) or (◄) button to stop or release the programme selected; press (● ● ●) to confirm.

Press buttons from (0) to (9) to enter the double figure time when programmes will stop, then press (● ● ●) to confirm.
Repeat the operation as regards respectively the minutes of the time when function begins, the hours and the minutes of the time when function ends.
Repeat the same operations for other programmes to be blocked.
Press (TV) button to conclude the operation.

Copy Function
This function allows dubbing from a video recorder, or from another set, to another one.
Press (ooo) button to recall the **"MAIN SETTINGS"**.
Press (▼) and (▲) buttons to select **"DUBBING"**, press (● ● ●) to confirm.
Press (▼) and (▲) buttons to select the input which the Video recorder, video camera, laser disc player etc., to be dubbed, is connected with: press (● ● ●) to confirm.
Dubbing is carried out on the video recorder or another set connected with AV2 output, SCART-type socket on the rear panel. Press (TV) button to conclude the operation.

Recall and Memory of ideal Audio/Video function levels
Press (>·<) button to recall the ideal levels which have been regulated at the factory. To change these values, keep (OSD) button of the front panel pressed for a long time (approx. 5 sec).

Instantaneous sound mute
Press (🔇) button to mute the TV audio immediately. Press it again to restore the previous volume level.

Switching the TV off
Press (⏻) button to switch the TV off.

Teletext
Press (TXT) button to consult Teletext.
Press buttons from (0) to (9) to enter the three-figure page number to be consulted.
A page can also be selected in one of the following three procedures:

- Press (i) button to recall the index page.
- Press (►) or (◄) button to select the previous or the following page.
- Press (● ● ●) button. If there are references to other pages (for example, "Sport on page 200") in the page on display, a cursor indicating the first page number will appear. Press (● ● ●) for a long time (approx. 1 sec) to recall the page indicated by the cursor, or press (● ● ●) button again to move the cursor on to other possible page numbers on display.
- Some networks broadcast some references to subjects of other pages by placing them at the bottom of a page (for example, Latest News, Sport, etc...) and show them off in red, green, yellow and light blue. Press one of the coloured buttons, red, green, yellow or light blue, to consult the page whose subject is shown off in the selected colour.
- Press one of the coloured buttons, red, green, yellow or light blue, to recall the page whose number is shown off in the selected colour on the page, on the screen.

With reference to this latter opportunity, page numbers to be recalled can be selected as follows:
Recall one page to consult.
Press the red button for a long time (approx. 1 sec.).
The page number on display appears at the page bottom, shown off by the red field; from now on, the page can be recalled by pressing the red button.
Proceed in the same way for the green, yellow and light blue buttons.
The opportunity to recall pages in this way is given only for teletext being transmitted on the programmes ranging from 1 to 10.

eletext functions

- Press (⧉) button to overlay the Teletext page onto the TV image.
- Press (◉) button and enter the sub-page which you want to recall, composed of four figures. Press (◉) button to recall other pages.
- Press (⊠) to hide the teletext page temporarily. On top left of the screen, "TXT" symbol will appear. When the teletext page is updated by the broadcasting station, the page number appears instead of "TXT" symbol. Press "TXT" button to consult the updated page.
- Press "⊕" button to expand the top part of the page on display. Press the button again to expand the bottom part. Press it for the third time to restore the normal page size.
- Press "⊖" button to interrupt the updating of the page on display. If the page has sub-pages, these are calculated by the TV set, which indicates them with asterisks on the bottom part of the screen. Press (▲) and (▼) buttons to consult the sub-pages received.
- Press (?) button possibly to reveal hidden text parts in the page (for example, quiz solutions).

ress (TV) button to return from the teletext mode to the TV mode.

Press (**PIP**) button to eliminate the window from the screen.

Specifications

Chassis:	**TESY, PC100**	
Power supply:	220/240 V, 50 Hz	
TV System:		
standard:	BGH DK, I, LL' (*)	
colour:	PAL 4.43 MHz NTSC 4.43 SECAM (*) NTSC 3.58 (**)	
channels:	CCIR, CATV FRANCE (*)	
audio:	FM, stereo 2C Digital NICAM (*) AM, mono (*)	
intermediate frequency:	38.9 MHz	
Tuning		
Receiver:	hyperband	
Receiving bands:	"A" 48.25 MHz - 168.25 MHz "B" 175.25 MHz - 463.25 MHz "C" 455.25 MHz - 855.25 MHz	
Type:	frequency synthesis	
Number of programmes	90, from 0 to 89 (***)	
Inputs and Outputs:		
Aerial (II)	75 Ohm type DIN 45325/2,	rear of TV
Hi-Fi stereo outlet:	RCA phono,	rear of TV
EURO connector AV1:	SCART type EN 50049,	rear of TV
EURO connector AV2:	SCART type EN 50049,	rear of TV
Jack headphone outlet:	type DIN 3.5 mm,	front of TV
Video outlet AV3:	RCA phono,	front of TV
Audio stereo outlet AV3:	RCA phono,	front of TV
S-VHS outlet AV3:	type DIN 4 poles for S-VHS,	front of TV
Power consumption:	130 Wh	
Audio power:	20+20 W rms.	

(*) Only on "Multistandard" models
(**) Only for TV signals from auxiliary inputs AV1, AV2, AV3
(***) In some models, 60, namely from 0 to 59